PREMIUM RESIDENTIAL RANGE

PREMIUM RANGE ZUGO COLLECTION
Satin Stainless Steel Accessories

JDMACDONALD

6899-10 Single Towel Rail

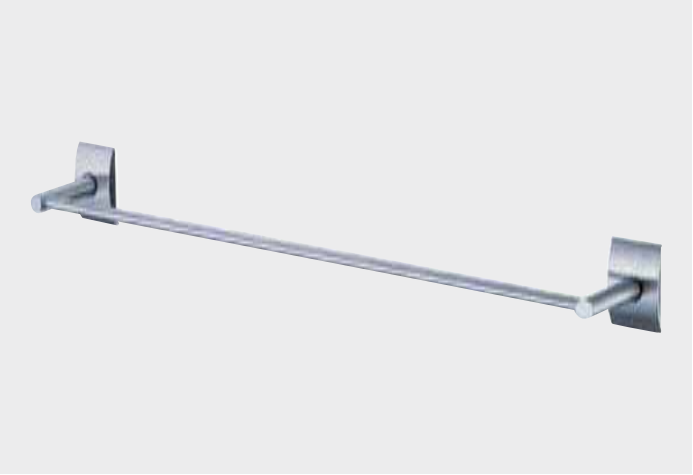

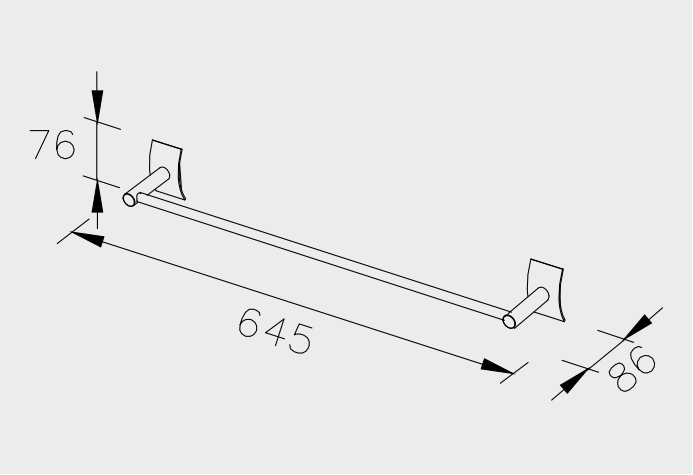

6899-14 Double Towel Rail

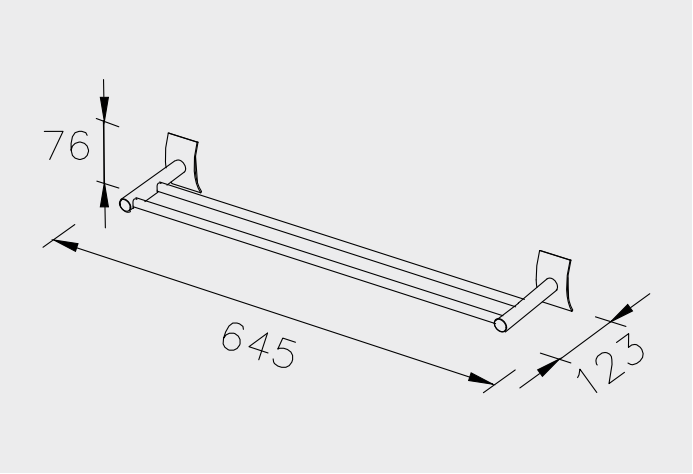

6899-12 Swivel Double Towel Rail

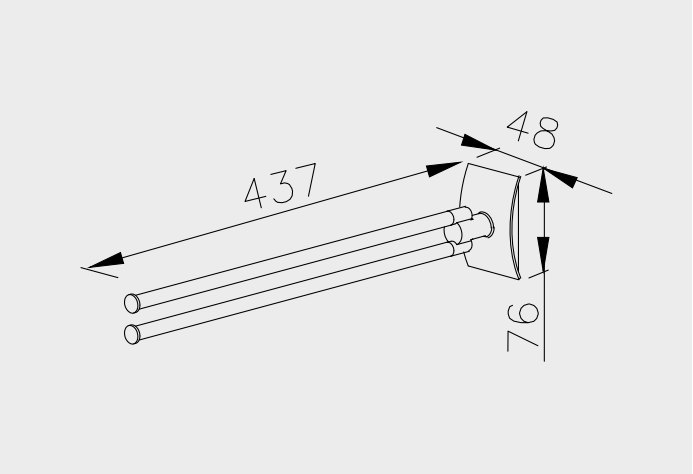

JD MacDonald reserves the right to, and does from time to time, make changes and improvements in design and dimensions.
The photographs & line drawings of the products in this catalogue are representational only. All dimensions are in millimetres.

Freecall 1800 023 441 or phone your nearest JD MacDonald Sales Office
Adelaide (08) 8168 2222, **Brisbane** (07) 3363 6400, **Melbourne** (03) 9271 6400, **Perth** (08) 9271 8455, **Sydney** (02) 9756 1622
A Division of MacDonald Johnston Pty Ltd 65–73 Nantilla Road, Clayton North, Victoria 3168 Tel (03) 9271 6400 Fax (03) 9271 6485

PREMIUM RANGE ZUGO COLLECTION
Satin Stainless Steel Accessories

JDMACDONALD

6899-65 Bath Towel Rack

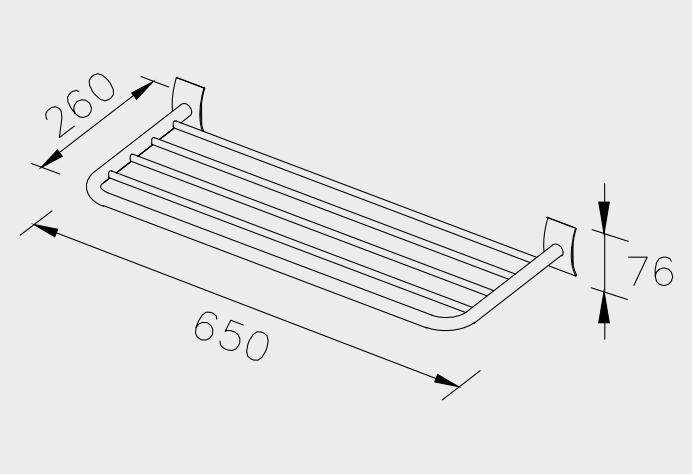

6899-66 Bath Towel Rack with Rail

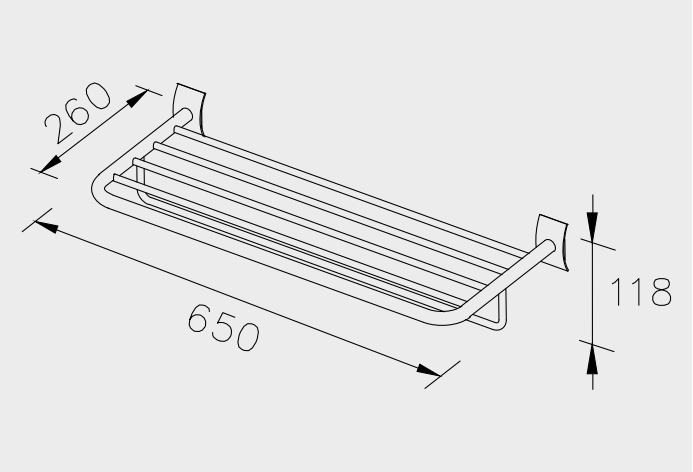

6899-60 Towel Ring

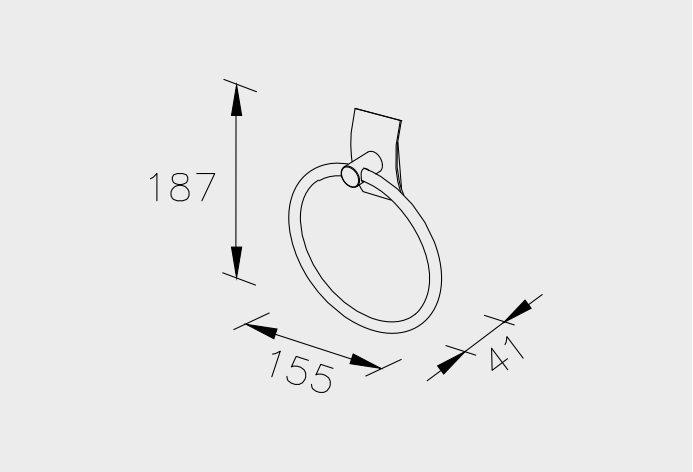

JD MacDonald reserves the right to, and does from time to time, make changes and improvements in design and dimensions.
The photographs & line drawings of the products in this catalogue are representational only. All dimensions are in millimetres.

Freecall 1800 023 441 or phone your nearest JD MacDonald Sales Office
Adelaide (08) 8168 2222, **Brisbane** (07) 3363 6400, **Melbourne** (03) 9271 6400, **Perth** (08) 9271 8455, **Sydney** (02) 9756 1622
A Division of MacDonald Johnston Pty Ltd 65–73 Nantilla Road, Clayton North, Victoria 3168 Tel (03) 9271 6400 Fax (03) 9271 6485

www.jdmacdonald.com.au

PREMIUM RANGE ZUGO COLLECTION
Satin Stainless Steel Accessories

JDMACDONALD

6899-55 Bath Grip

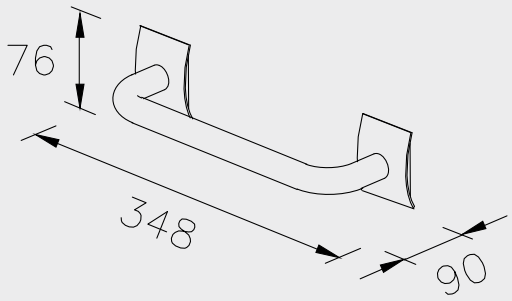

6899-50 Single Robe Hook

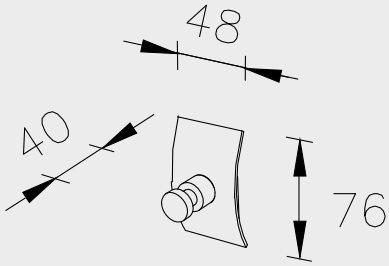

6899-51 Double Robe Hook

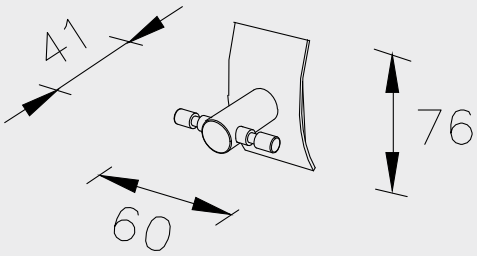

JD MacDonald reserves the right to, and does from time to time, make changes and improvements in design and dimensions.
The photographs & line drawings of the products in this catalogue are representational only. All dimensions are in millimetres.

Freecall 1800 023 441 or phone your nearest JD MacDonald Sales Office
Adelaide (08) 8168 2222, **Brisbane** (07) 3363 6400, **Melbourne** (03) 9271 6400, **Perth** (08) 9271 8455, **Sydney** (02) 9756 1622
A Division of MacDonald Johnston Pty Ltd 65–73 Nantilla Road, Clayton North, Victoria 3168 Tel (03) 9271 6400 Fax (03) 9271 6485

PREMIUM RANGE ZUGO COLLECTION
Satin Stainless Steel Accessories

JDMACDONALD

6899-27 Soap Dispenser (with White Porcelain)

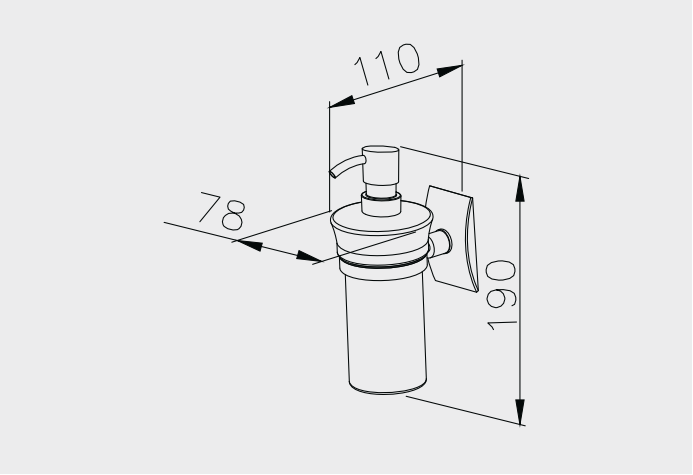

6899-31 Tumbler Holder (with White Porcelain)

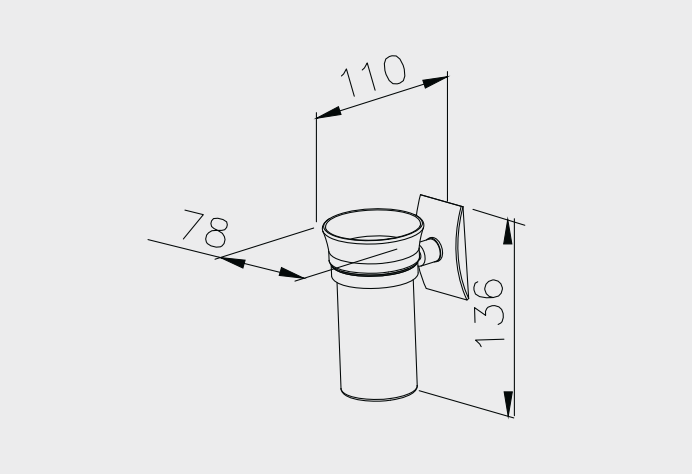

6899-81 Toilet Brush Holder (with White Porcelain)

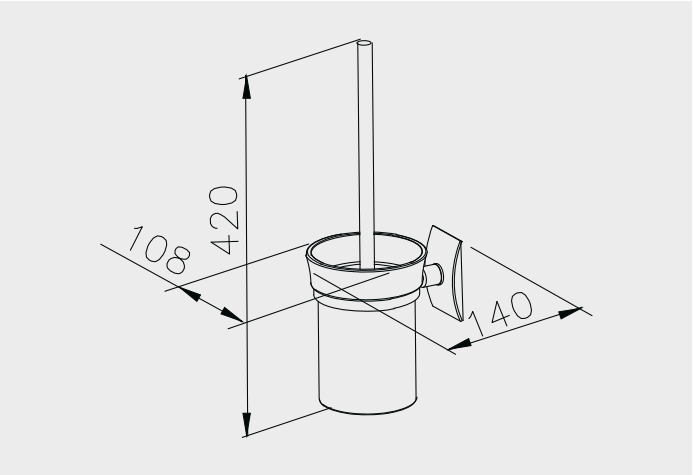

JD MacDonald reserves the right to, and does from time to time, make changes and improvements in design and dimensions.
The photographs & line drawings of the products in this catalogue are representational only. All dimensions are in millimetres.

Freecall 1800 023 441 or phone your nearest JD MacDonald Sales Office
Adelaide (08) 8168 2222, **Brisbane** (07) 3363 6400, **Melbourne** (03) 9271 6400, **Perth** (08) 9271 8455, **Sydney** (02) 9756 1622
A Division of MacDonald Johnston Pty Ltd 65–73 Nantilla Road, Clayton North, Victoria 3168 Tel (03) 9271 6400 Fax (03) 9271 6485

PREMIUM RANGE ZUGO COLLECTION
Satin Stainless Steel Accessories

JDMACDONALD

6899-21 Soap Dish (with White Porcelain)

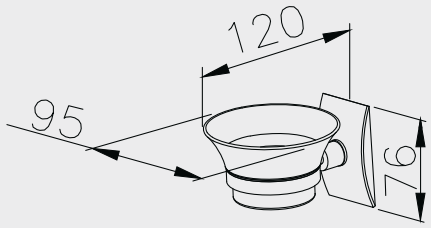

6899-87 Shower Soap Basket

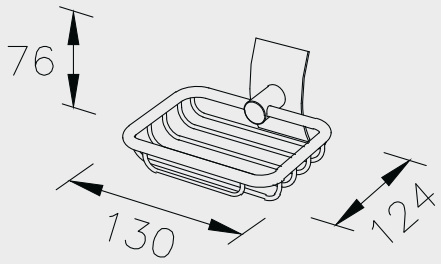

6899-35 Tooth Brush Holder

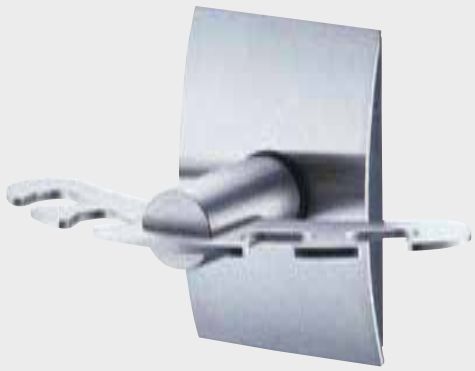

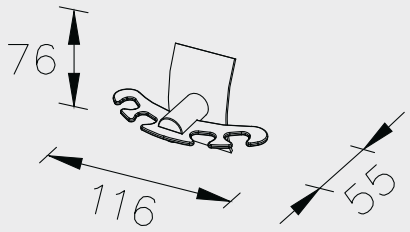

JD MacDonald reserves the right to, and does from time to time, make changes and improvements in design and dimensions.
The photographs & line drawings of the products in this catalogue are representational only. All dimensions are in millimetres.

Freecall 1800 023 441 or phone your nearest JD MacDonald Sales Office
Adelaide (08) 8168 2222, **Brisbane** (07) 3363 6400, **Melbourne** (03) 9271 6400, **Perth** (08) 9271 8455, **Sydney** (02) 9756 1622
A Division of MacDonald Johnston Pty Ltd 65–73 Nantilla Road, Clayton North, Victoria 3168 Tel (03) 9271 6400 Fax (03) 9271 6485

PREMIUM RANGE ZUGO COLLECTION
Satin Stainless Steel Accessories

JDMACDONALD

6899-70 Shelf

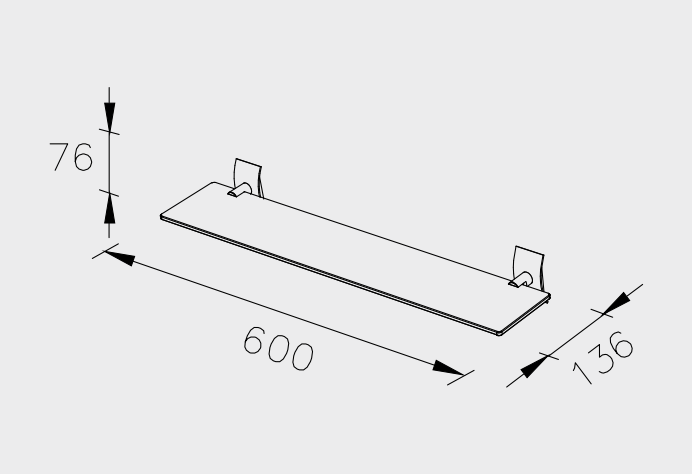

6899-40 Toilet Roll Holder

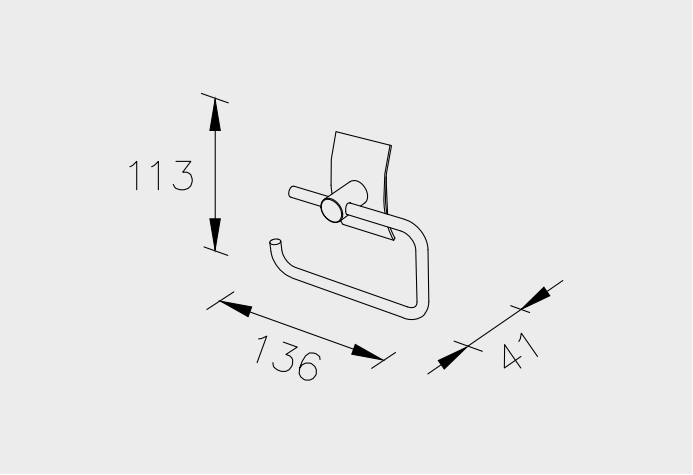

6899-41 Toilet Roll Holder with Lid

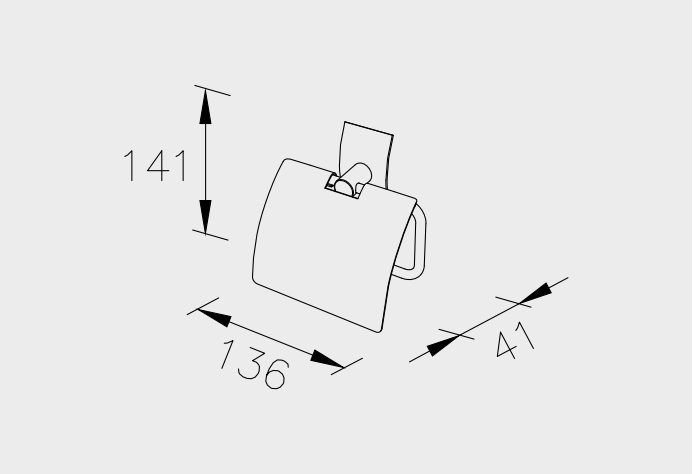

JD MacDonald reserves the right to, and does from time to time, make changes and improvements in design and dimensions.
The photographs & line drawings of the products in this catalogue are representational only. All dimensions are in millimetres.

Freecall 1800 023 441 or phone your nearest JD MacDonald Sales Office
Adelaide (08) 8168 2222, **Brisbane** (07) 3363 6400, **Melbourne** (03) 9271 6400, **Perth** (08) 9271 8455, **Sydney** (02) 9756 1622
A Division of MacDonald Johnston Pty Ltd 65–73 Nantilla Road, Clayton North, Victoria 3168 Tel (03) 9271 6400 Fax (03) 9271 6485

www.jdmacdonald.com.au

PREMIUM RANGE LILLA COLLECTION
Chrome Plated Brass Accessories

JDMACDONALD

6810-10 Single Towel Rail

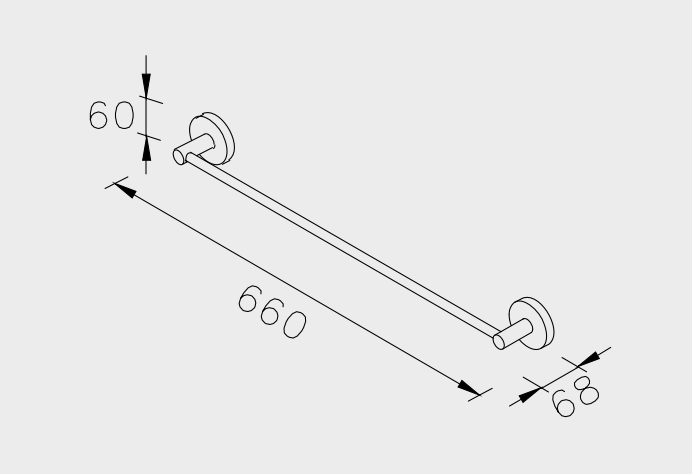

6810-14 Double Towel Rail

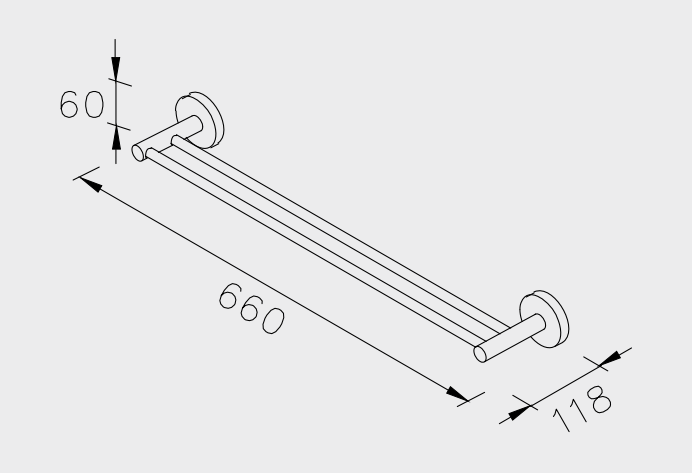

6810-12 Swivel Double Towel Rail

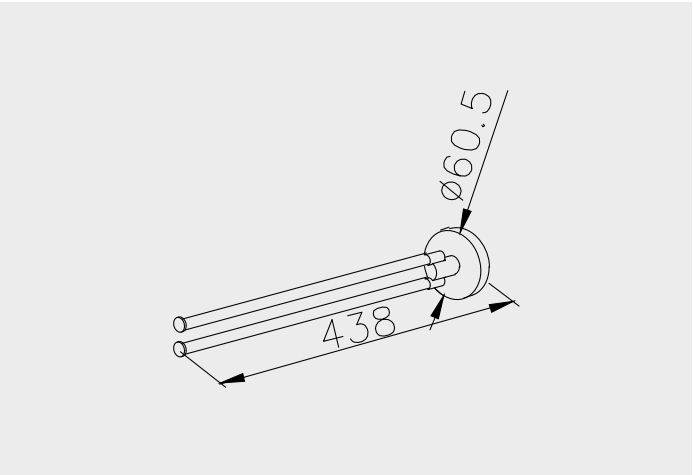

JD MacDonald reserves the right to, and does from time to time, make changes and improvements in design and dimensions.
The photographs & line drawings of the products in this catalogue are representational only. All dimensions are in millimetres.

Freecall 1800 023 441 or phone your nearest JD MacDonald Sales Office
Adelaide (08) 8168 2222, **Brisbane** (07) 3363 6400, **Melbourne** (03) 9271 6400, **Perth** (08) 9271 8455, **Sydney** (02) 9756 1622

A Division of MacDonald Johnston Pty Ltd 65–73 Nantilla Road, Clayton North, Victoria 3168 Tel (03) 9271 6400 Fax (03) 9271 6485

www.jdmacdonald.com.au

PREMIUM RANGE LILLA COLLECTION
Chrome Plated Brass Accessories

JDMACDONALD

6810-65 Bath Towel Rack

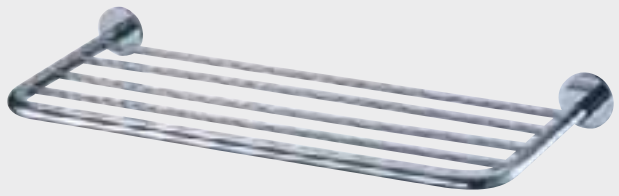

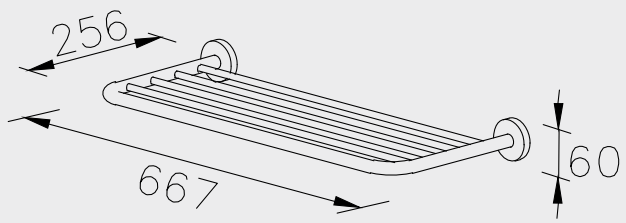

6810-66 Bath Towel Rack with Rail

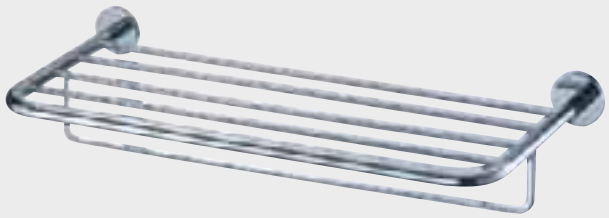

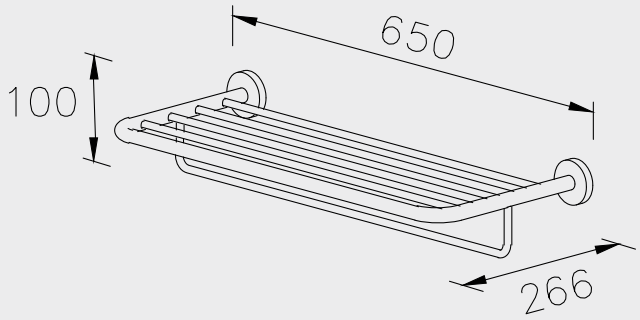

6810-60 Towel Ring

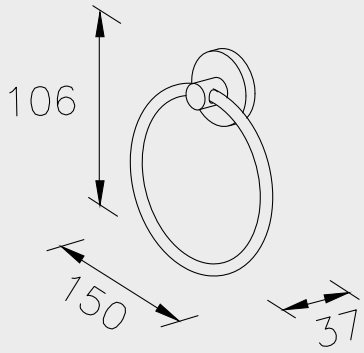

JD MacDonald reserves the right to, and does from time to time, make changes and improvements in design and dimensions.
The photographs & line drawings of the products in this catalogue are representational only. All dimensions are in millimetres.

Freecall 1800 023 441 or phone your nearest JD MacDonald Sales Office
Adelaide (08) 8168 2222, **Brisbane** (07) 3363 6400, **Melbourne** (03) 9271 6400, **Perth** (08) 9271 8455, **Sydney** (02) 9756 1622
A Division of MacDonald Johnston Pty Ltd 65–73 Nantilla Road, Clayton North, Victoria 3168 Tel (03) 9271 6400 Fax (03) 9271 6485

PREMIUM RANGE LILLA COLLECTION
Chrome Plated Brass Accessories

JDMACDONALD

6810-15 Single Towel Rail – Vertical

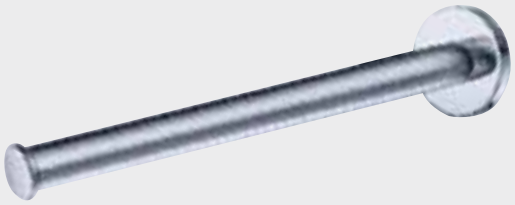

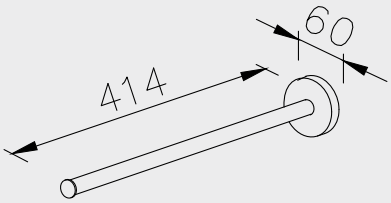

6810-50 Single Robe Hook

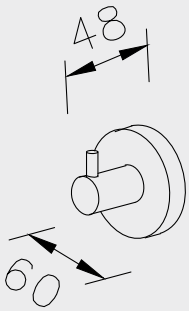

6810-55 Bath Grip

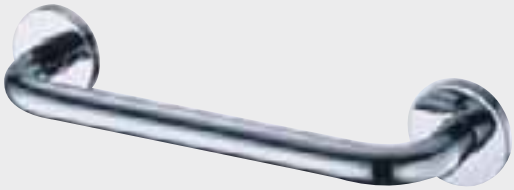

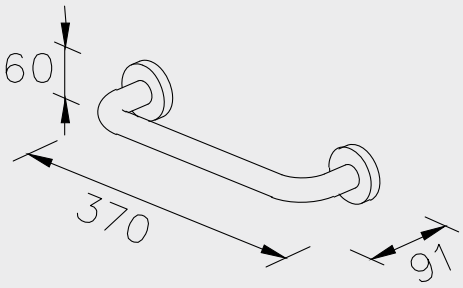

JD MacDonald reserves the right to, and does from time to time, make changes and improvements in design and dimensions.
The photographs & line drawings of the products in this catalogue are representational only. All dimensions are in millimetres.

Freecall 1800 023 441 or phone your nearest JD MacDonald Sales Office
Adelaide (08) 8168 2222, **Brisbane** (07) 3363 6400, **Melbourne** (03) 9271 6400, **Perth** (08) 9271 8455, **Sydney** (02) 9756 1622
A Division of MacDonald Johnston Pty Ltd 65–73 Nantilla Road, Clayton North, Victoria 3168 Tel (03) 9271 6400 Fax (03) 9271 6485

www.jdmacdonald.com.au

PREMIUM RANGE LILLA COLLECTION
Chrome Plated Brass Accessories

JDMACDONALD

6810-25 Soap Dispenser (with Frosted Glass)

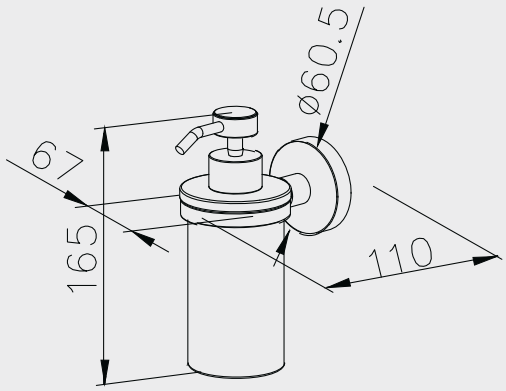

6810-31 Tumbler Holder (with Frosted Glass)

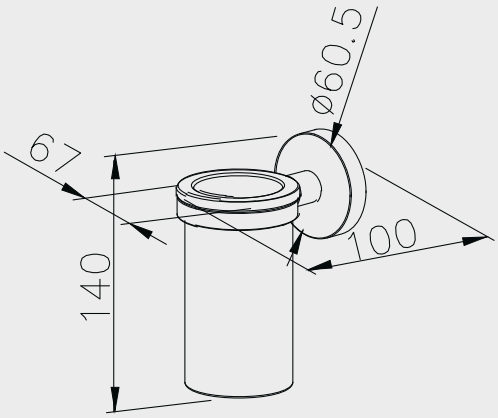

6810-81 Toilet Brush Holder (with Frosted Glass)

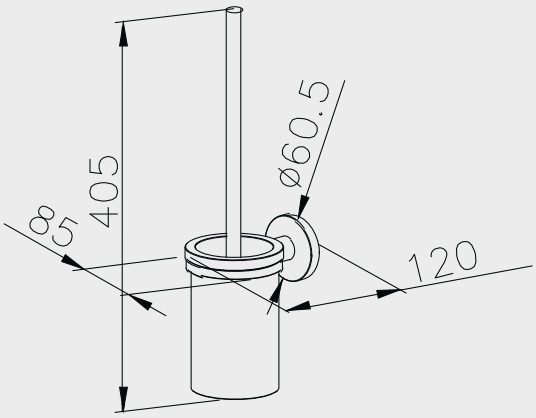

JD MacDonald reserves the right to, and does from time to time, make changes and improvements in design and dimensions.
The photographs & line drawings of the products in this catalogue are representational only. All dimensions are in millimetres.

Freecall 1800 023 441 or phone your nearest JD MacDonald Sales Office
Adelaide (08) 8168 2222, **Brisbane** (07) 3363 6400, **Melbourne** (03) 9271 6400, **Perth** (08) 9271 8455, **Sydney** (02) 9756 1622
A Division of MacDonald Johnston Pty Ltd 65–73 Nantilla Road, Clayton North, Victoria 3168 Tel (03) 9271 6400 Fax (03) 9271 6485

PREMIUM RANGE LILLA COLLECTION
Chrome Plated Brass Accessories

JDMACDONALD

6810-21 Soap Dish (with Frosted Glass)

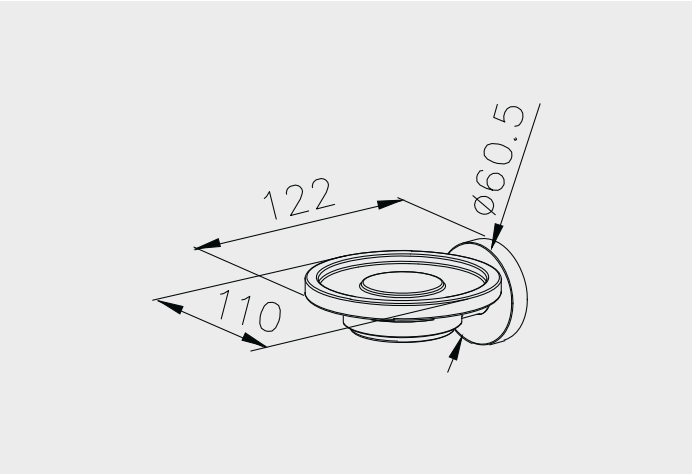

6810-87 Shower Soap Basket

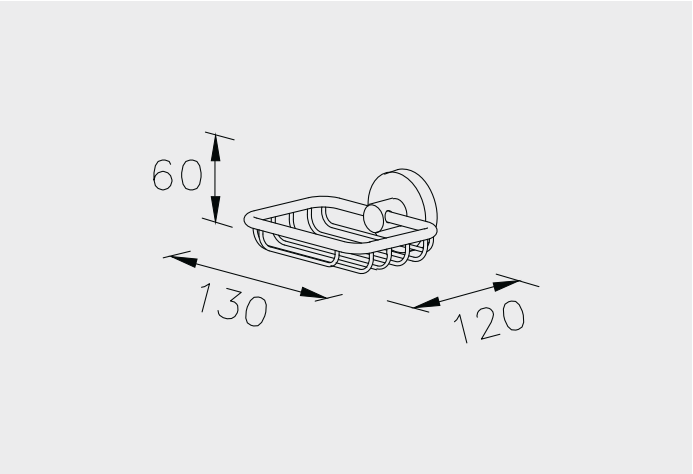

6810-70 Shelf

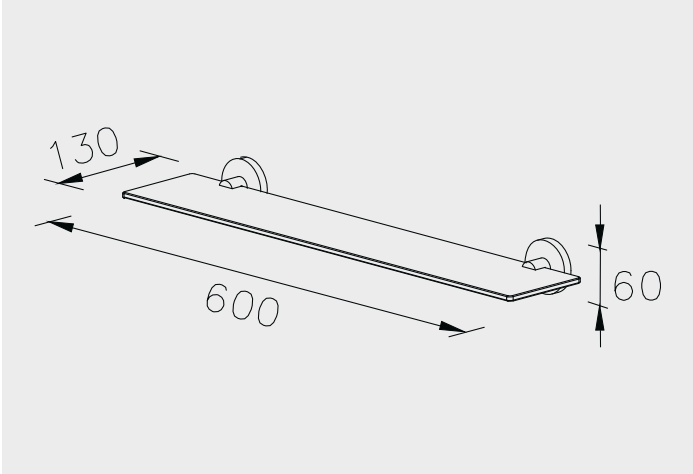

JD MacDonald reserves the right to, and does from time to time, make changes and improvements in design and dimensions.
The photographs & line drawings of the products in this catalogue are representational only. All dimensions are in millimetres.

Freecall 1800 023 441 or phone your nearest JD MacDonald Sales Office
Adelaide (08) 8168 2222, **Brisbane** (07) 3363 6400, **Melbourne** (03) 9271 6400, **Perth** (08) 9271 8455, **Sydney** (02) 9756 1622

A Division of MacDonald Johnston Pty Ltd 65–73 Nantilla Road, Clayton North, Victoria 3168 Tel (03) 9271 6400 Fax (03) 9271 6485

www.jdmacdonald.com.au

PREMIUM RANGE LILLA COLLECTION
Chrome Plated Brass Accessories

JDMACDONALD

6810-40 Toilet Roll Holder

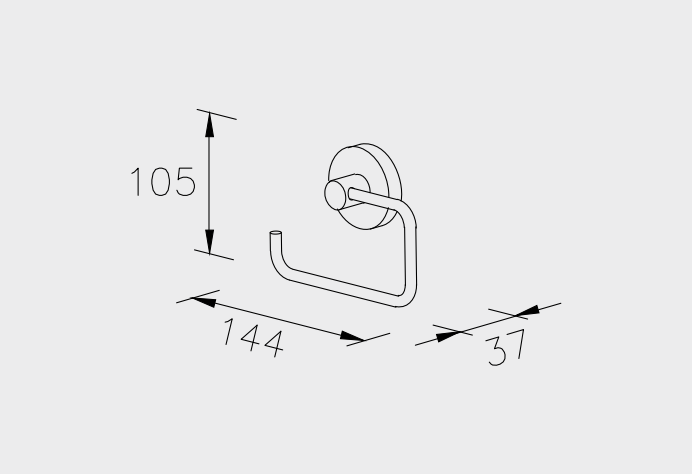

6810-41 Toilet Roll Holder with Lid

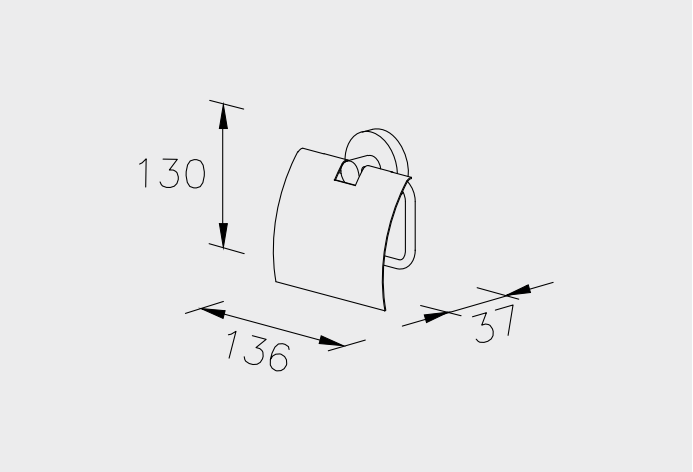

6810-43 Spare Toilet Roll Holder

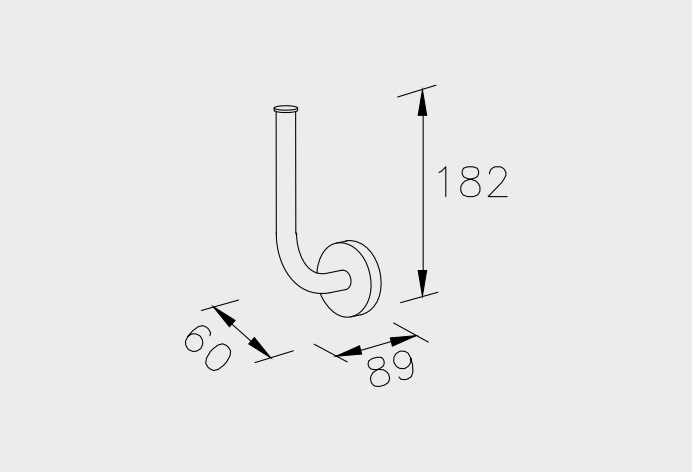

JD MacDonald reserves the right to, and does from time to time, make changes and improvements in design and dimensions.
The photographs & line drawings of the products in this catalogue are representational only. All dimensions are in millimetres.

Freecall 1800 023 441 or phone your nearest JD MacDonald Sales Office
Adelaide (08) 8168 2222, **Brisbane** (07) 3363 6400, **Melbourne** (03) 9271 6400, **Perth** (08) 9271 8455, **Sydney** (02) 9756 1622

A Division of MacDonald Johnston Pty Ltd 65–73 Nantilla Road, Clayton North, Victoria 3168 Tel (03) 9271 6400 Fax (03) 9271 6485

www.jdmacdonald.com.au

PREMIUM RANGE LILLA COLLECTION
Chrome Plated Brass Accessories

JDMACDONALD

6810-44 Tissue Dispenser (Polished Stainless Steel Finish)

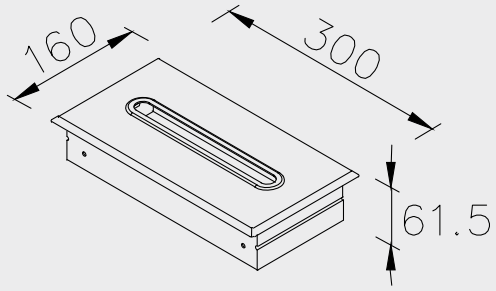

6810-68 Clothes Line with Hook

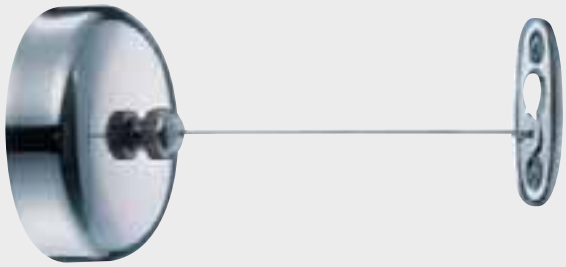

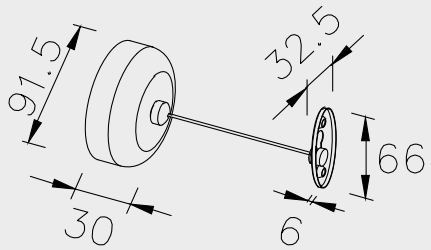

6810-BB Bottle Opener (Stainless Steel)

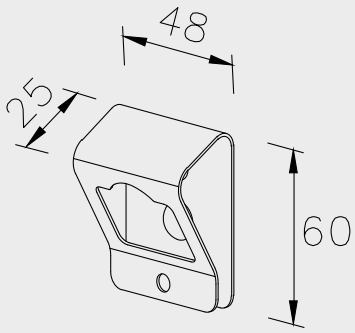

JD MacDonald reserves the right to, and does from time to time, make changes and improvements in design and dimensions.
The photographs & line drawings of the products in this catalogue are representational only. All dimensions are in millimetres.

Freecall 1800 023 441 or phone your nearest JD MacDonald Sales Office
Adelaide (08) 8168 2222, **Brisbane** (07) 3363 6400, **Melbourne** (03) 9271 6400, **Perth** (08) 9271 8455, **Sydney** (02) 9756 1622
A Division of MacDonald Johnston Pty Ltd 65–73 Nantilla Road, Clayton North, Victoria 3168 Tel (03) 9271 6400 Fax (03) 9271 6485

PREMIUM RANGE POLA COLLECTION
Chrome Plated Brass Accessories

JDMACDONALD

6909-10 Single Towel Rail

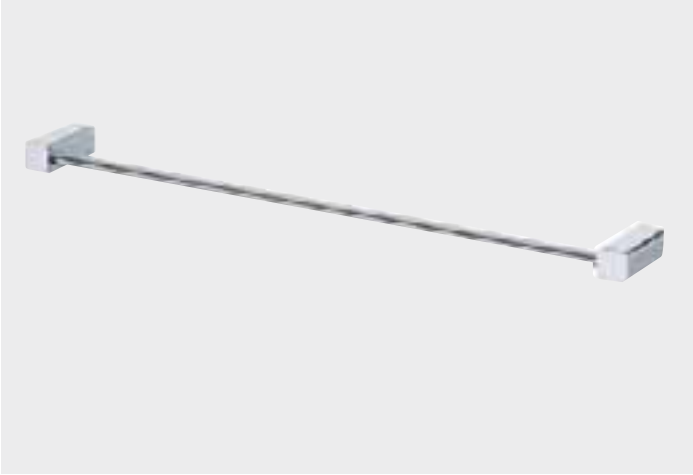

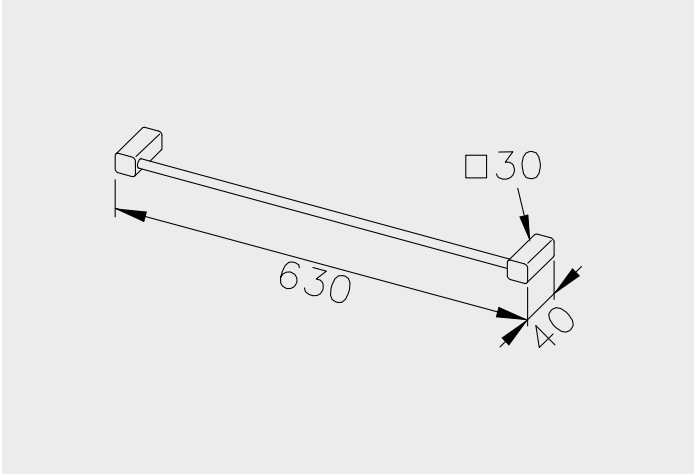

6909-14 Double Towel Rail

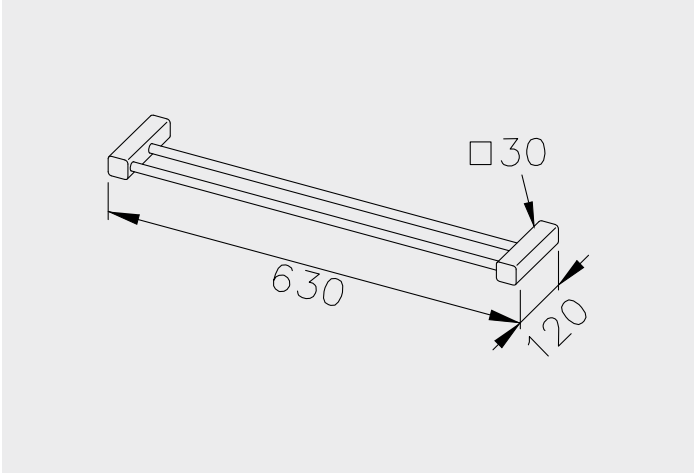

6909-60 Towel Ring

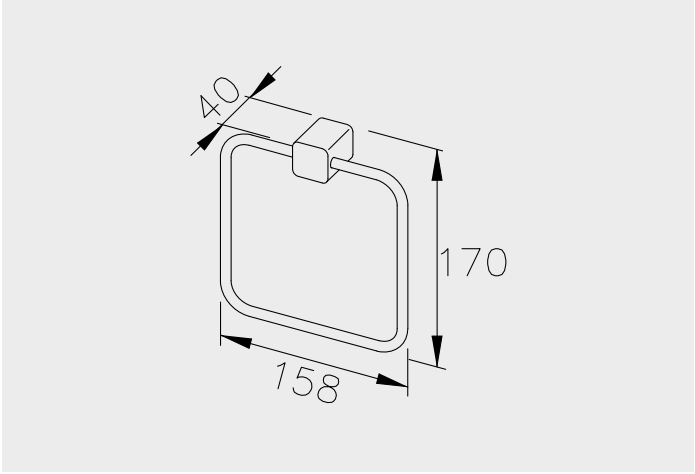

JD MacDonald reserves the right to, and does from time to time, make changes and improvements in design and dimensions.
The photographs & line drawings of the products in this catalogue are representational only. All dimensions are in millimetres.

Freecall 1800 023 441 or phone your nearest JD MacDonald Sales Office
Adelaide (08) 8168 2222, **Brisbane** (07) 3363 6400, **Melbourne** (03) 9271 6400, **Perth** (08) 9271 8455, **Sydney** (02) 9756 1622
A Division of MacDonald Johnston Pty Ltd 65–73 Nantilla Road, Clayton North, Victoria 3168 Tel (03) 9271 6400 Fax (03) 9271 6485

www.jdmacdonald.com.au

PREMIUM RANGE POLA COLLECTION
Chrome Plated Brass Accessories

JDMACDONALD

6909-50 Single Robe Hook

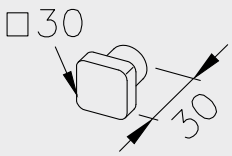

6909-51 Single Robe Hook

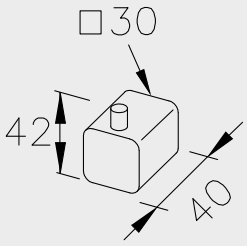

6909-30 Tumbler Holder (with Frosted Glass)

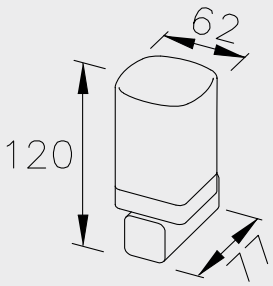

JD MacDonald reserves the right to, and does from time to time, make changes and improvements in design and dimensions.
The photographs & line drawings of the products in this catalogue are representational only. All dimensions are in millimetres.

Freecall 1800 023 441 or phone your nearest JD MacDonald Sales Office
Adelaide (08) 8168 2222, **Brisbane** (07) 3363 6400, **Melbourne** (03) 9271 6400, **Perth** (08) 9271 8455, **Sydney** (02) 9756 1622
A Division of MacDonald Johnston Pty Ltd 65–73 Nantilla Road, Clayton North, Victoria 3168 Tel (03) 9271 6400 Fax (03) 9271 6485

PREMIUM RANGE POLA COLLECTION
Chrome Plated Brass Accessories

JDMACDONALD

6909-20 Soap Dish (with Frosted Glass)

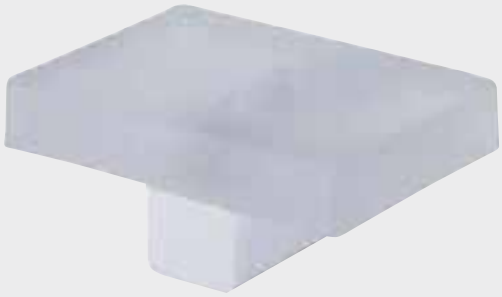

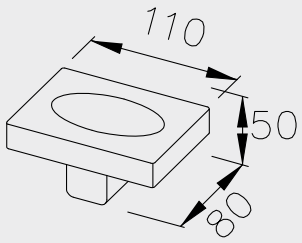

6909-70 Shelf

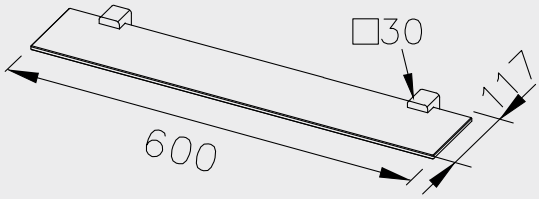

6909-40 Toilet Roll Holder

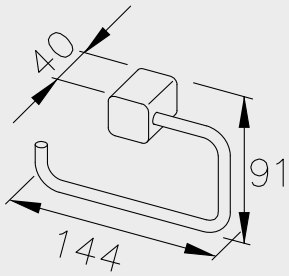

JD MacDonald reserves the right to, and does from time to time, make changes and improvements in design and dimensions.
The photographs & line drawings of the products in this catalogue are representational only. All dimensions are in millimetres.

Freecall 1800 023 441 or phone your nearest JD MacDonald Sales Office
Adelaide (08) 8168 2222, **Brisbane** (07) 3363 6400, **Melbourne** (03) 9271 6400, **Perth** (08) 9271 8455, **Sydney** (02) 9756 1622

A Division of MacDonald Johnston Pty Ltd 65–73 Nantilla Road, Clayton North, Victoria 3168 Tel (03) 9271 6400 Fax (03) 9271 6485

www.jdmacdonald.com.au

PREMIUM RANGE POLA COLLECTION
Chrome Plated Brass Accessories

JDMACDONALD

6909-41 Toilet Roll Holder with Lid

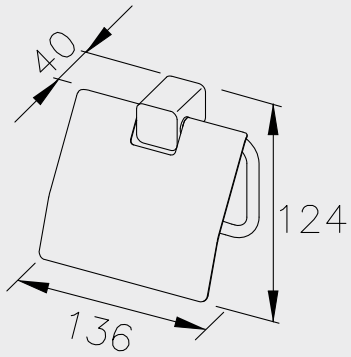

6909-83 Toilet Brush Holder (Wall Mounted)

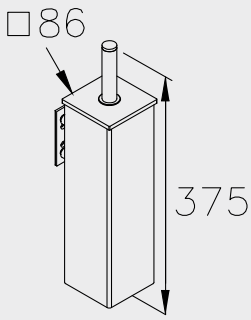

JD MacDonald reserves the right to, and does from time to time, make changes and improvements in design and dimensions.
The photographs & line drawings of the products in this catalogue are representational only. All dimensions are in millimetres.

Freecall 1800 023 441 or phone your nearest JD MacDonald Sales Office
Adelaide (08) 8168 2222, **Brisbane** (07) 3363 6400, **Melbourne** (03) 9271 6400, **Perth** (08) 9271 8455, **Sydney** (02) 9756 1622

A Division of MacDonald Johnston Pty Ltd 65–73 Nantilla Road, Clayton North, Victoria 3168 Tel (03) 9271 6400 Fax (03) 9271 6485

www.jdmacdonald.com.au

PREMIUM RANGE SPIRA COLLECTION
Chrome Plated Brass Accessories

JDMACDONALD

6920-10 Single Towel Rail

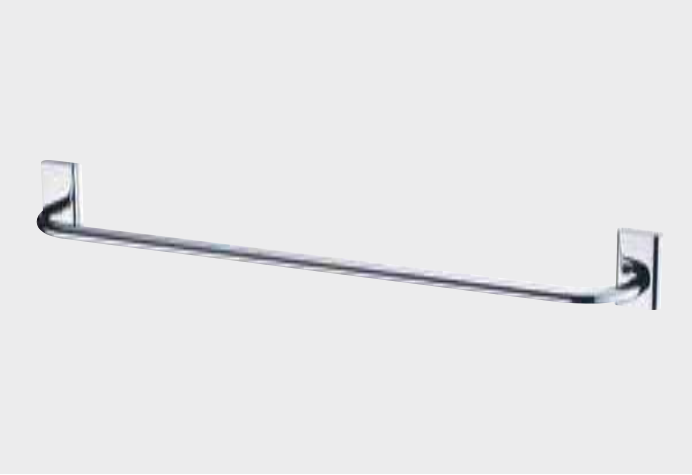

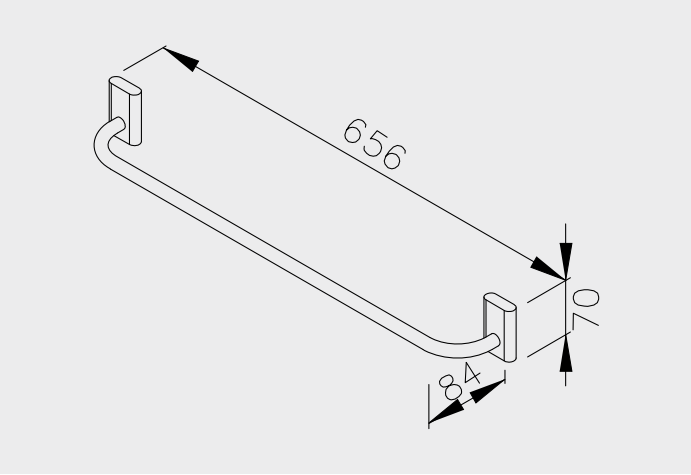

6920-60 Towel Ring

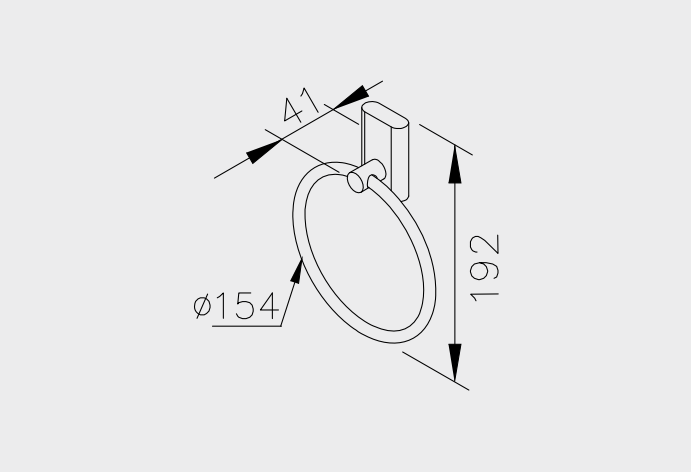

6920-50 Single Robe Hook

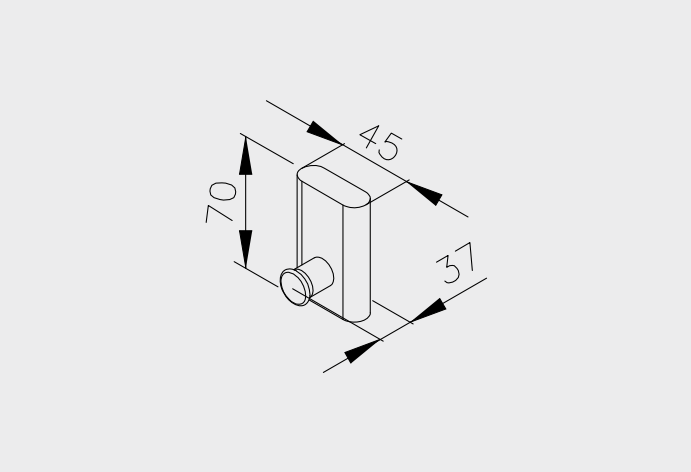

JD MacDonald reserves the right to, and does from time to time, make changes and improvements in design and dimensions.
The photographs & line drawings of the products in this catalogue are representational only. All dimensions are in millimetres.

Freecall 1800 023 441 or phone your nearest JD MacDonald Sales Office
Adelaide (08) 8168 2222, **Brisbane** (07) 3363 6400, **Melbourne** (03) 9271 6400, **Perth** (08) 9271 8455, **Sydney** (02) 9756 1622

A Division of MacDonald Johnston Pty Ltd 65–73 Nantilla Road, Clayton North, Victoria 3168 Tel (03) 9271 6400 Fax (03) 9271 6485

www.jdmacdonald.com.au

PREMIUM RANGE SPIRA COLLECTION
Chrome Plated Brass Accessories

JDMACDONALD

6920-27 Soap Dispenser (with White Porcelain)

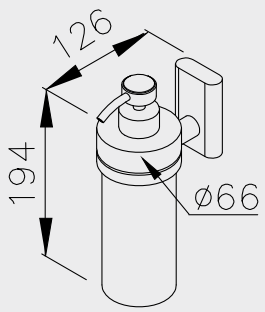

6920-31 Tumbler Holder (with White Porcelain)

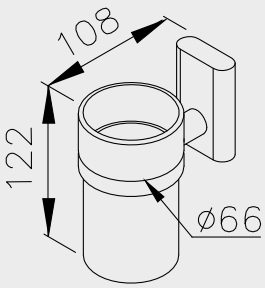

6920-81 Toilet Brush Holder (with White Porcelain)

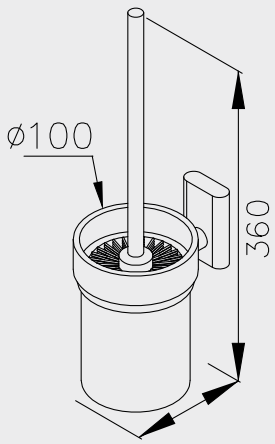

JD MacDonald reserves the right to, and does from time to time, make changes and improvements in design and dimensions.
The photographs & line drawings of the products in this catalogue are representational only. All dimensions are in millimetres.

Freecall 1800 023 441 or phone your nearest JD MacDonald Sales Office
Adelaide (08) 8168 2222, **Brisbane** (07) 3363 6400, **Melbourne** (03) 9271 6400, **Perth** (08) 9271 8455, **Sydney** (02) 9756 1622
A Division of MacDonald Johnston Pty Ltd 65–73 Nantilla Road, Clayton North, Victoria 3168 Tel (03) 9271 6400 Fax (03) 9271 6485

PREMIUM RANGE SPIRA COLLECTION
Chrome Plated Brass Accessories

JDMACDONALD

6920-21 Soap Dish

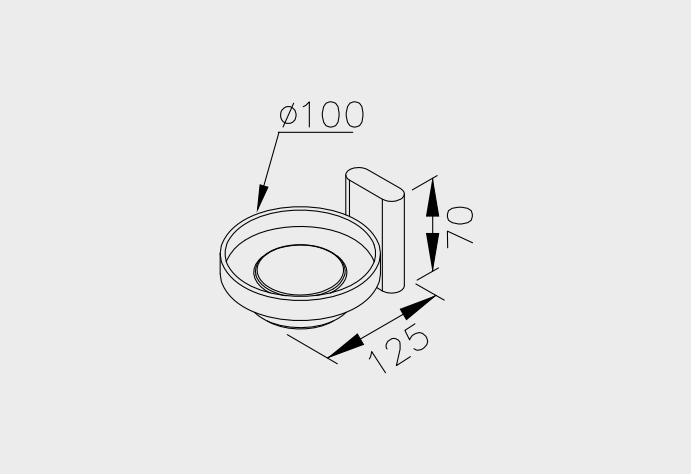

6920-70 Shelf

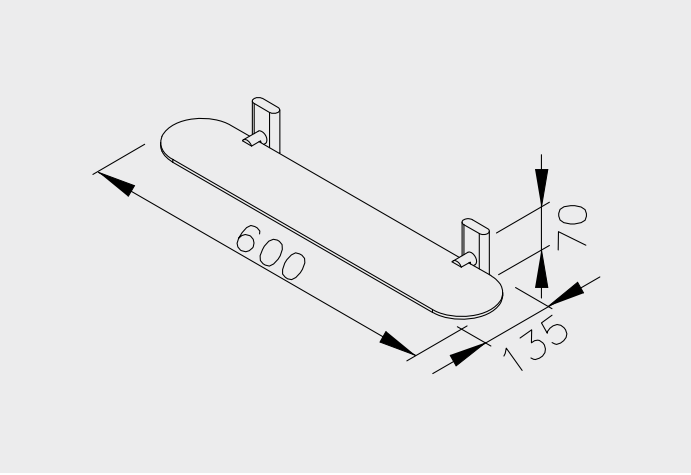

6920-40 Toilet Roll Holder

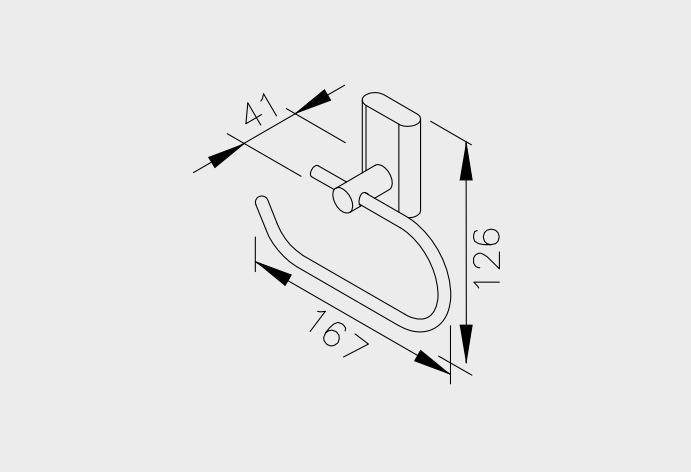

JD MacDonald reserves the right to, and does from time to time, make changes and improvements in design and dimensions.
The photographs & line drawings of the products in this catalogue are representational only. All dimensions are in millimetres.

Freecall 1800 023 441 or phone your nearest JD MacDonald Sales Office
Adelaide (08) 8168 2222, **Brisbane** (07) 3363 6400, **Melbourne** (03) 9271 6400, **Perth** (08) 9271 8455, **Sydney** (02) 9756 1622

A Division of MacDonald Johnston Pty Ltd 65–73 Nantilla Road, Clayton North, Victoria 3168 Tel (03) 9271 6400 Fax (03) 9271 6485

www.jdmacdonald.com.au

PREMIUM RANGE SPIRA COLLECTION
Chrome Plated Brass Accessories

6920-41	Toilet Roll Holder with Lid

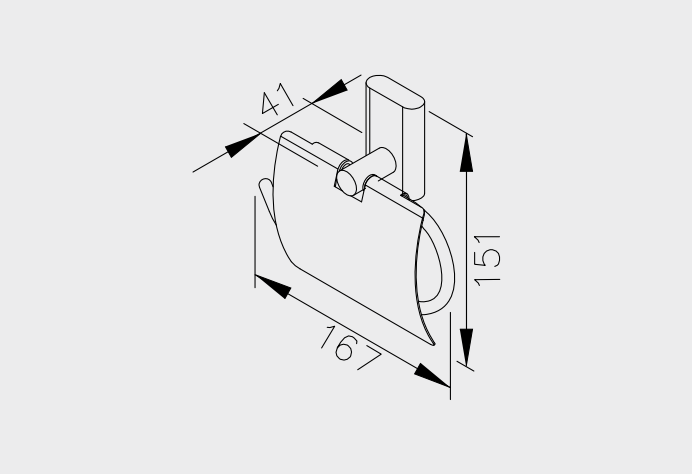

JD MacDonald reserves the right to, and does from time to time, make changes and improvements in design and dimensions.
The photographs & line drawings of the products in this catalogue are representational only. All dimensions are in millimetres.

Freecall 1800 023 441 or phone your nearest JD MacDonald Sales Office
Adelaide (08) 8168 2222, **Brisbane** (07) 3363 6400, **Melbourne** (03) 9271 6400, **Perth** (08) 9271 8455, **Sydney** (02) 9756 1622

A Division of MacDonald Johnston Pty Ltd 65–73 Nantilla Road, Clayton North, Victoria 3168 Tel (03) 9271 6400 Fax (03) 9271 6485

PREMIUM RANGE 6806/6807 SERIES
Stainless Steel (6806) & Chrome Plated Brass (6807) Accessories

6806-85	Shower Basket (Long)
6807-85	Shower Basket (Long)

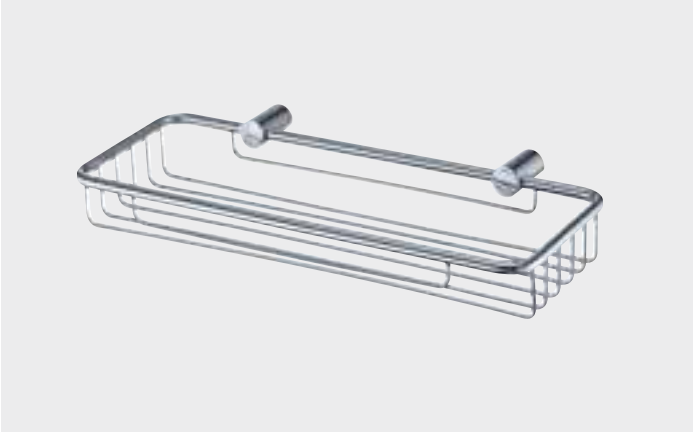

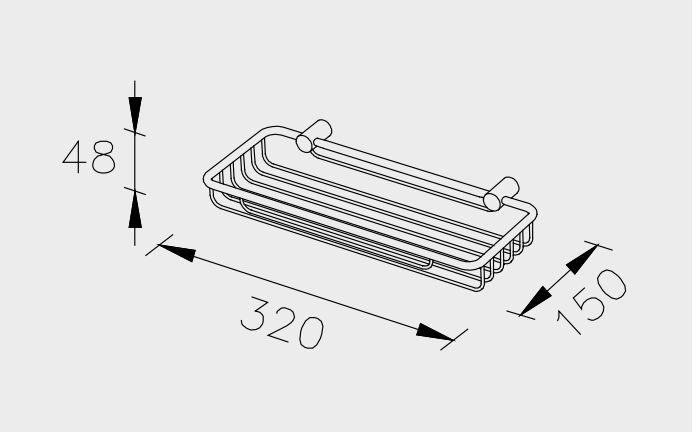

6806-86	Shower Basket (Short)
6807-86	Shower Basket (Short)

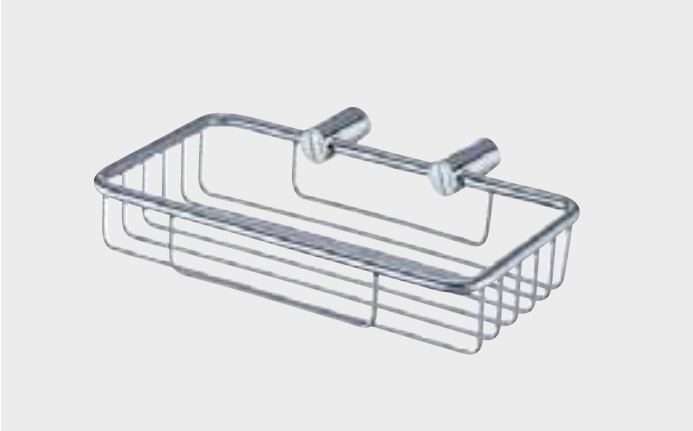

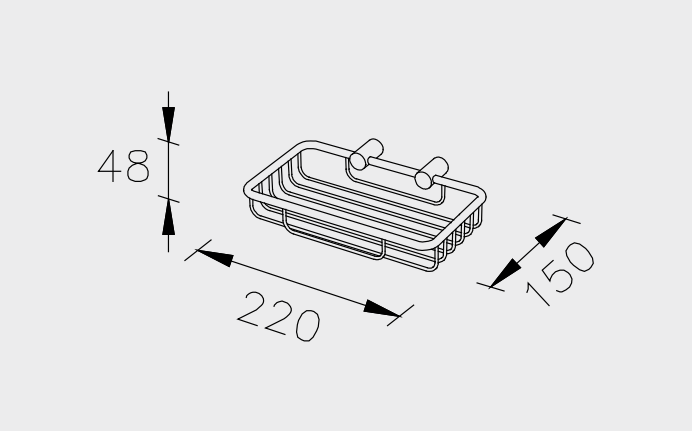

6806-88	Shower Basket (Corner)
6807-88	Shower Basket (Corner)

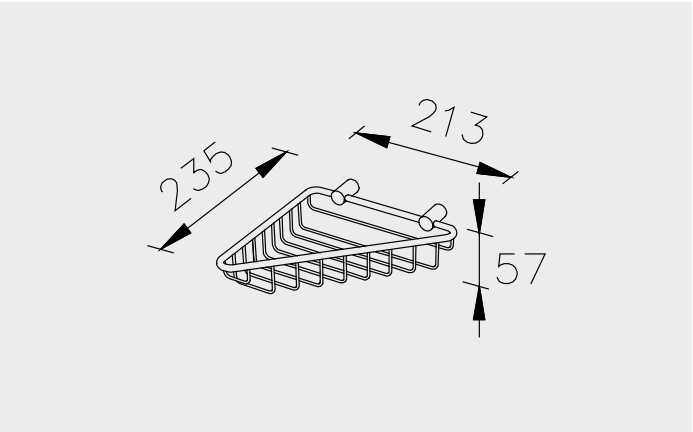

JD MacDonald reserves the right to, and does from time to time, make changes and improvements in design and dimensions.
The photographs & line drawings of the products in this catalogue are representational only. All dimensions are in millimetres.

Freecall 1800 023 441 or phone your nearest JD MacDonald Sales Office
Adelaide (08) 8168 2222, **Brisbane** (07) 3363 6400, **Melbourne** (03) 9271 6400, **Perth** (08) 9271 8455, **Sydney** (02) 9756 1622
A Division of MacDonald Johnston Pty Ltd 65–73 Nantilla Road, Clayton North, Victoria 3168 Tel (03) 9271 6400 Fax (03) 9271 6485

www.jdmacdonald.com.au